Allied Vision

FireWire

Guppy
F-033

- 1394a camera
- Lightweight
- Robust design
- Machine vision camera

Description

Ultra-compact, inexpensive 1394 VGA machine vision camera

The Guppy F-033B/C is an ultra-compact, inexpensive VGA machine vision camera with a sensitive CCD sensor (Sony ICX424). At full resolution, it runs up to 58 fps. Higher frame rates can be reached by a smaller AOI.
Options

- Various IR cut/pass filters
- White medical housing

Specifications

Guppy	F-033
Interface	IEEE 1394a - 400 Mb/s, 1 port
Resolution	656 × 494
Sensor	Sony ICX424
Sensor type	CCD Progressive
Sensor size	Type 1/3
Cell size	7.4 µm
Lens mount	C
Max frame rate at full resolution	58 fps
ADC	10 bit
On-board FIFO	0 Mbyte
Output	
Bit depth	8 bit
Mono modes	Mono8

Guppy	F-033
Color modes RGB	n/a
Raw modes	Raw8
General purpose inputs/outputs (GPIOs)	
TTL I/Os	1
RS-232	1
Operating conditions/dimensions	
Power requirements (DC)	8 V - 36 V
Power consumption (@12 V)	<2 W
Mass	50 g
Body dimensions (L × W × H in mm)	48.2 × 30 × 30 mm incl. connectors
Regulations	CE, FCC Class B, RoHS

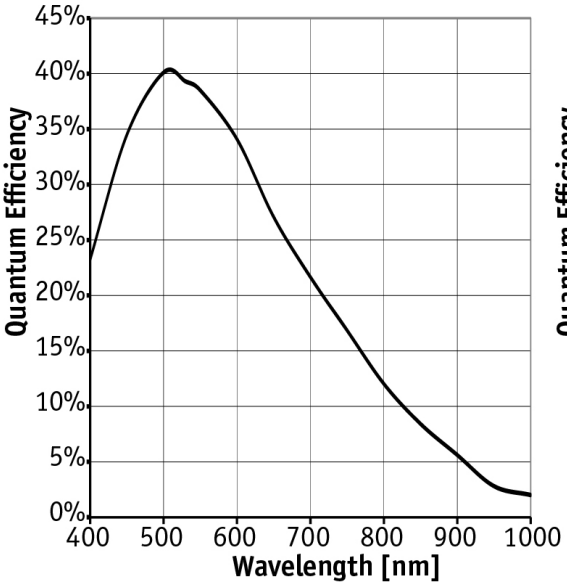

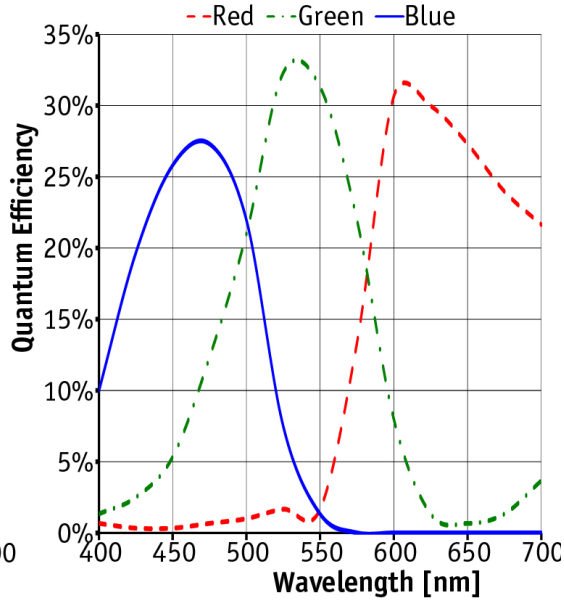

Features

- LUT (look-up table)
- ROI, separate ROI for auto features
- Auto gain (0 to 24 dB)
- Auto exposure (129 µs to 67 s)
- Auto white balance
- Storable user sets

Allied Vision

Technical drawing

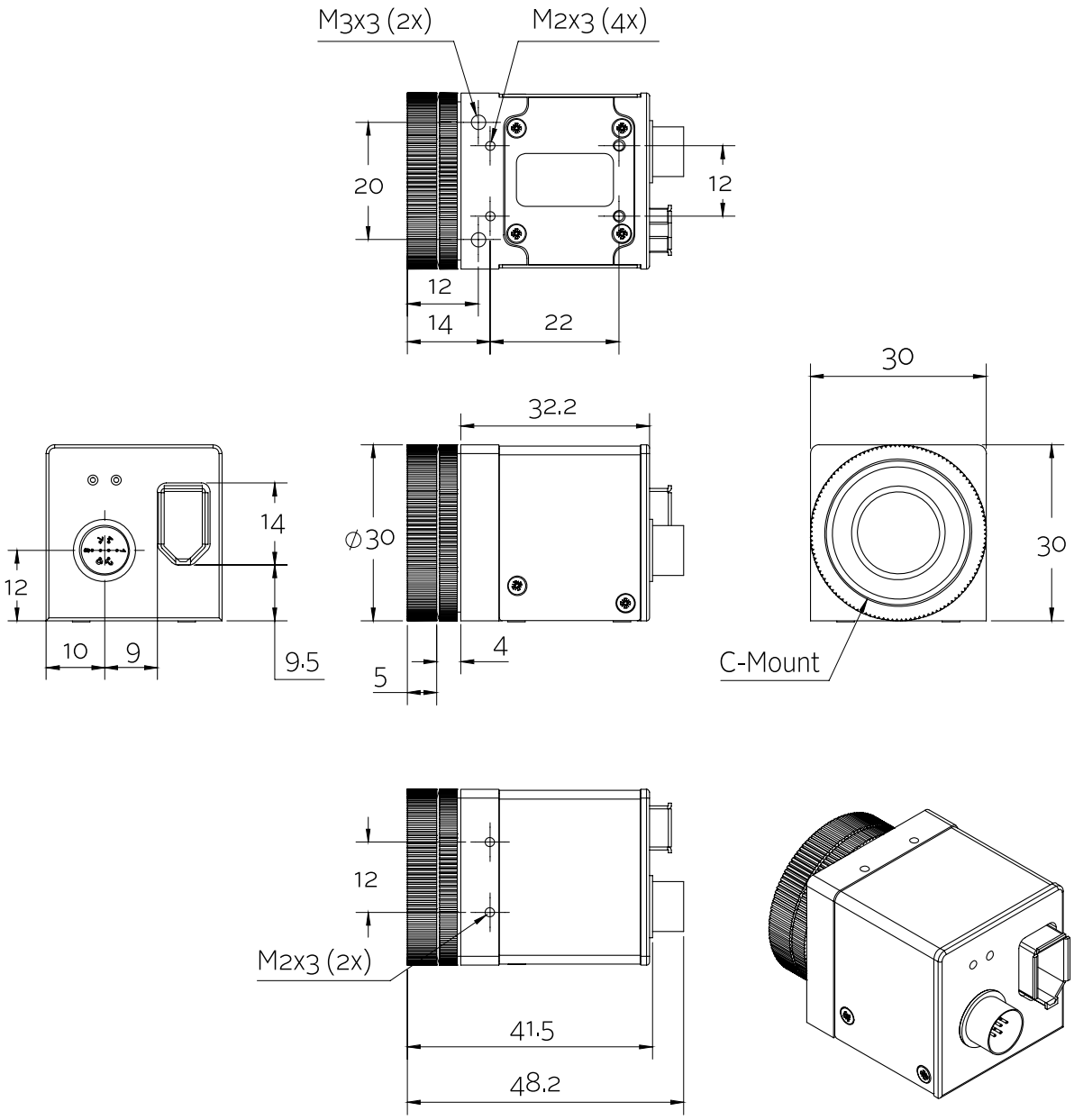

Allied Vision

Applications

This inexpensive, reliable mainstream VGA machine vision camera addresses a wide range of imaging applications. With its ultra-compact, small housing, the Guppy F-033B/C is the perfect fit for all applications with space constraints.

- Machine vision
- Robotics (robust housing, lightweight camera)
- Quality control
- Ophthalmology
- Semiconductor inspection
- Industrial inspection
- ITS/Traffic monitoring
- ... and many more