Automatic Maximum–Minimum Search Method for Accurate PDL and DOP Characterization

Yongqiang Shi, *Member, IEEE*, *Member, OSA*, Lianshan Yan, *Senior Member, IEEE*, *Member, OSA*, and X. Steve Yao, *Member, IEEE*, *Member, OSA*

***Abstract*—A fully automatic deterministic maximum–minimum search method for fast accurate polarization-dependent loss (PDL) and degree of polarization (DOP) characterization is described. It is shown theoretically, based on a three-dimensional (3-D) surface model, that the method can unambiguously determine PDL and DOP values. Because it measures PDL and DOP values according to their definitions and without the need for scanning over a large number of polarization states or engaging in extensive intermediate calculations, this method provides the attractive features of high speed, wide measurement range, wavelength insensitivity, and calibration-free operation. The new PDL/DOP characterization method was experimentally demonstrated in a prototype instrument using an in-line polarization controller with ultralow activation loss and PDL.**

***Index Terms*—Degree of polarization (DOP), polarization, polarization-dependent loss (PDL), maximum–minimum search.**

I. Introduction

POLARIZATION-DEPENDENT loss (PDL) and its effects on long-haul fiber-optic networks have been studied extensively. Theoretical and experimental investigations showed that PDL could couple with network polarization mode dispersion (PMD) to degrade data quality and PMD compensator performance [1]–[5]. To ensure network quality of service, the PDL of each component should be minimized, and the cumulative PDL of the network must be managed within a desired limit. Therefore, accurate PDL measurements are required for almost all optical components, submodules, and modules as part of the specified standard parameters [6]. Once the optical-component PDL values are known, the network global PDL due to multiple PDL concatenation can be statistically estimated from individual component PDL data [7].

The PDL of an optical component is the maximum optical power transmittance change over all polarization states and is defined as $\mathrm{PDL} = 10\log(T_{\max}/T_{\min})$ in terms of decibels. For large-scale production environments, automatic PDL measurement is required because manual measurement at a single wavelength can take several minutes or longer. Several approaches have been developed to measure PDL automatically by using either random or defined input polarization states, namely 1) the pseudorandom or deterministic polarization scanning method [8], [9], 2) Jones-matrix method [10], 3) Mueller-matrix method [11]–[13], and 4) Mueller–Stokes method [14], [15]. The polarization-scanning and Mueller-matrix approaches have been adopted as two standard measurement methods [8], [16]. Both the random-scanning and matrix methods have their own advantages and limitations, such as measurement speed, accuracy, optical bandwidth, and calibration requirements. In general, most commercial PDL measurement instruments using the random-scanning, Jones-matrix, or Mueller-matrix methods yield accurate PDL measurement values that are typically between 0.05 and 15 dB. At PDL extremes, particularly the high-PDL end, either the measurement accuracy deteriorates significantly or a much longer scanning time is required. The main reason for the accuracy deterioration at the high- and low-PDL extremes is that all of these methods do not truly measure the maximum and minimum transmittances used for PDL calculation. The scanning method uses a polarization generator or scrambler to generate either a deterministic or a pseudorandom subset of all possible states of polarization (SOPs) at the input light source; PDL is then calculated from the maximum and minimum power values obtained from the subset. Depending on the Poincaré sphere coverage and the PDL range, the scanned results may not be the exact maximum and minimum transmission of the component. On the other hand, the Jones-matrix, Mueller-matrix, and Mueller–Stokes methods all measure the optical transmission at a set of fixed SOPs that do not generally coincide with the maximum and minimum transmissions. The PDL is calculated from the matrix elements that were obtained from the optical intensity measurements. Small measurement errors or circuit noise can affect the results significantly. An additional drawback is that most of such deterministic fixed SOP measurements require system or wavelength calibrations.

Another polarization-related parameter is the degree of polarization (DOP). The DOP can be useful in monitoring network PMD and optical signal-to-noise ratio for network health evaluation [17]–[19]. Depolarized light sources with low-DOP values are critical to Raman amplifiers [20], [21] and fiber-sensor systems [22]; therefore, accurate DOP characterization is important for such applications. DOP measurements are typically performed using polarization-scrambling methods or polarimeters [23], which employ the same principle as the polarization-scanning and Mueller-matrix methods for PDL characterization.

In this paper, we describe a maximum–minimum (max–min) search method for deterministic PDL and DOP measurements. The concept of the method may sound obvious from the PDL

Manuscript received April 11, 2006; revised July 20, 2006.

Y. Shi was with the General Photonics Corporation, Chino, CA 91710 USA. He is now with Boeing Satellite Systems, Los Angeles, CA 90009-2919 USA (e-mail: yongqiang.shi@boeing.com).

L. Yan and X. S. Yao are with the General Photonics Corporation, Chino, CA 91710 USA (e-mail: lsyan@generalphotonics.com).

Color versions of Figs. 5–8 are available online at http://ieeexplore.ieee.org.

Digital Object Identifier 10.1109/JLT.2006.883121

0733-8724/$20.00 © 2006 IEEE

definition; however, to our knowledge, no detailed theoretical and experimental works were performed to validate its feasibility for automatic and unambiguous determination of PDL. Based on a simple three-dimensional (3-D)-surface contour model in Stokes space, we show theoretically that the true maximum and minimum transmittances of a device can be uniquely determined because no local maximums or minimums exist and therefore validate the approach. We implement the max–min search method by employing an active feedback polarization control algorithm using a fiber squeezer polarization controller (PC) to systematically and rapidly search for the maximum and minimum transmittances without the need to measure all possible SOPs. The direct measurement of maximum and minimum power transmittances assures calibration-free highly accurate high-speed measurement over a larger PDL or DOP range. In the succeeding sections, we will present the theoretical background of the proposed approach, the measurement implementation, and experimental results from a prototype measurement system.

II. Polarization Dependent Transmittance in Stokes Space

When a partially polarized monochromatic optical beam propagates through a nondepolarizing optical system, the transmission characteristics of the optical system can be modeled as a single partial polarizer [24]. Although PMD may depolarize light in general, for monochromatic light sources commonly used for measurements, such a depolarization can be neglected. Using a Stokes-vector representation and Mueller-matrix treatment, the optical intensity transmission can be expressed as a function of the input SOP, i.e.,

$$T = m_{11} + P(m_{12}s_1 + m_{13}s_2 + m_{14}s_3) \tag{1}$$

where m_{1i} represents the first-row Mueller-matrix elements, P is the DOP of the light source, and s_i represents the normalized Stokes parameters of the totally polarized light component of the light source. If we define vectors $\mathbf{s} = \{s_1, s_2, s_3\}$ and $\mathbf{m} = \{m_{12}, m_{13}, m_{14}\}$ in the Stokes subspace (S1, S2, S3), the optical transmittance can be expressed as a function of a single variable θ, which is the angle between vectors $\mathbf{s}$ and $\mathbf{m}$, i.e.,

$$\begin{aligned} T &= m_{11} + P(\mathbf{m}\cdot\mathbf{s}) \\ &= m_{11} + P|\mathbf{m}|\cos\theta. \end{aligned} \tag{2}$$

In Stokes space, the transmittance of the optical system can be described by a 3-D surface formed by the revolution of the limaçon of Pascal [25] about the m-axis. This result is similar to that obtained from a depolarization optical system treatment [26]. Because the optical transmittance T is always positive, i.e., $0 \le P|\mathbf{m}| \le m_{11}$, (2) represents a family of ordinary limaçons with a circle ($|\mathbf{m}| = 0$) and a cardioid ($|\mathbf{m}| = m_{11}$ and $P = 1$) at the two extremes, as shown in Fig. 1, in a plane containing $\mathbf{m}$. Based on the properties of the ordinary limaçon, the polarization-dependent transmission depends only on the angle θ between the $\mathbf{m}$ and $\mathbf{s}$ vectors. The maximum and minimum transmissions are obtained when θ becomes 0 and π, respectively, i.e.,

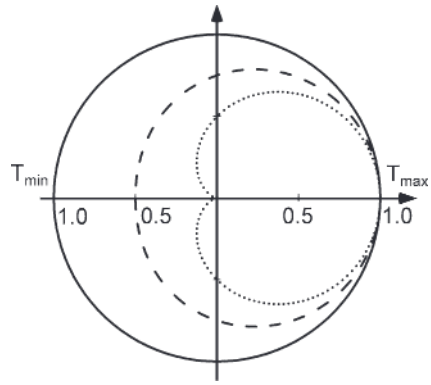

Fig. 1. Cross-sectional view of the limaçon of revolution with PDL $= 0$ (solid line), PDL $= 3$ dB (broken line), and an ideal polarizer (dotted line). The horizontal axis is along the vector $\mathbf{m}$ direction, and the vertical axis is set for a $\theta = 90^\circ$ reference. The maximum transmittance is normalized to unity.

$$\begin{pmatrix} T_{\max} \\ T_{\min} \end{pmatrix} = \begin{pmatrix} m_{11} + P|\mathbf{m}| \\ m_{11} - P|\mathbf{m}| \end{pmatrix}. \tag{3}$$

Obviously, the two polarization states that correspond to the maximum and minimum transmittances in (3) are orthogonal. The vectors that describe these two states are antiparallel in Stokes space, and the points that represent the two SOPs on the Poincaré sphere are symmetric about the origin. Equation (2) also tells us that the optical transmission changes monotonically from maximum to minimum and vice versa. The rotational symmetry of the limaçon of revolution allows us to reach either the maximum or minimum transmittances along any arbitrary path on the 3-D surface that links the two points.

Equations (2) and (3) form the basis of our automatic max–min search method for PDL and DOP measurements. In this method, the input SOP is systematically adjusted to make $\mathbf{s}$ parallel and antiparallel to $\mathbf{m}$ so that the maximum and minimum transmittances of the optical system are obtained. The monotonic relationship in (2) ensures that the maximum and minimum transmittances are unique. There are no local minima or maxima on the transmission surface along any paths between $T_{\max}$ and $T_{\min}$.

Equation (3) has two equations with three variables, and the DOP and PDL are coupled. Therefore, a light source of known DOP or a component of known PDL is required for PDL or DOP measurement, respectively. A totally polarized light source ($P = 100\%$) is convenient for PDL measurement. In this case, $T_{\max}$ and $T_{\min}$ from (3) can be used to calculate the PDL according to the definition.

For DOP measurement, a linear polarizer placed between the PC and the photodetecctor is an excellent optical element with known PDL. Assuming that an ideal PC and a linear polarizer aligned in the x-direction are used so that $|\mathbf{m}| = |m_{12}| = m_{11}$, DOP measurement also reduces to the search for and measurement of the maximum and minimum transmittances, i.e.,

$$P = \frac{T_{\max} - T_{\min}}{T_{\max} + T_{\min}} \times 100\%. \tag{4}$$

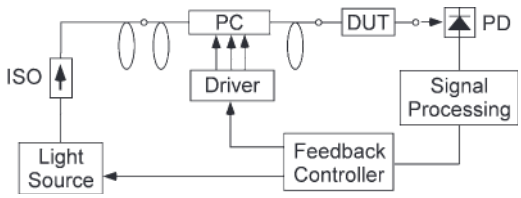

Fig. 2. Block diagram of the automatic max–min transmittance search implementation (PC, fiber-squeezer-based PC; DUT, device under test; PD, photodetector; ISO, optical isolator).

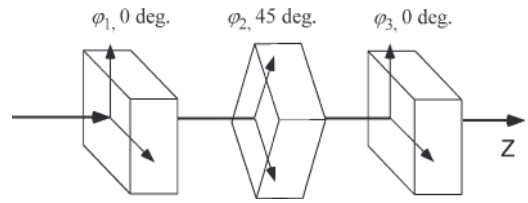

Fig. 3. Schematic diagram of the three-stage fiber-squeezer-based variable-waveplate PC.

Therefore, both PDL and DOP characterizations can share the same max–min search algorithm, and both functions can be integrated in a single measurement system.

III. Automatic MAX–MIN Search Method Implementation

The proposed PDL and DOP measurement system is shown in Fig. 2, where the light source is a totally polarized highly stable laser or a light source to be characterized for the PDL and DOP measurements, respectively. For DOP measurements, the device under test (DUT) will be replaced with a high extinction ratio (ER) linear polarizer. Because both PDL and DOP measurements require active searching for the maximum and minimum transmittances, a fast low-PDL low-activation-loss PC plays a key role in the measurement system. In our system, a high-performance fiber-squeezer-based PC was selected for the application [27].

The PC is a cascaded three-stage variable-waveplate PC with the optic axes of the three plates fixed at 0°, 45°, and 0° orientations, respectively, as shown in Fig. 3. The variable-waveplate effect is achieved by applying radial stress to the optical fiber with a piezoelectric actuator. The phase retardation of each plate is linearly proportional to the voltage applied to the piezoelectric actuator. At the ith waveplate, the phase retardation can be expressed as

$$\varphi_i = \pi \frac{V}{V_{\pi,i}} + \varphi_{0,i} \tag{5}$$

where $V_{\pi,i}$ and $\varphi_{0,i}$ are the half-wave voltage and initial phase bias retardation, respectively. Neglecting insertion loss and PDL, the Mueller matrix of the PC can be written in (6), shown at the bottom of the page. As each φ_i varies between 0 and 2π, any arbitrary output SOP can be obtained from any input SOP [28], [29]. Complete Poincaré-sphere coverage ensures that the search results are the true maximum and minimum transmittances.

The simplest automatic max–min search operation can be achieved using a dc control voltage actuation algorithm. Starting from an arbitrary SOP, the controller takes an initial optical intensity measurement and steps the dc voltage applied to one waveplate of the PC while holding the voltages at the other waveplates constant. A new photodetector output is obtained and then compared with the previous value. Based on the comparison results of the dc output intensities, the controller determines the voltage-step direction and voltage-step amplitude. This search process repeats for each waveplate until the optical power change is within the limit of the noise floor or the resolution of the detector circuit. When the maximum or minimum intensity is reached, the controller records the signal-level value and starts to search for the other extreme. To overcome the limited dynamic range of the circuit and improve the accuracy in high-PDL or highly polarized light DOP measurements, the minimum transmittance search can be combined with an automatic-gain-control approach that effectively expands the dynamic range of the measurement system. By comparison, in a fast random-scan algorithm [30], it is very difficult to implement the automatic gain control.

A different signal processing approach is to combine a small sinusoidal ac modulation with the dc control voltage to the PC waveplates. From (2), the output spectrum distribution changes as the angle between $\mathbf{m}$ and $\mathbf{s}$ changes. At the maximum and minimum intensity levels, the ratio of the second harmonic to the fundamental frequency of the sinusoidal modulation signal is maximized. A sensitive lock-in amplifier or digital signal processing circuit can be implemented to accurately determine the maximum and minimum transmittances using this algorithm. Since narrow-band filters can be implemented for noise rejection, the ac signal processing method is typically more accurate than the dc voltage-step method but requires additional implementation hardware.

Once the maximum or minimum transmittance is obtained, we can use the orthogonality property described in Section II to speed up the searching process for the other transmission extreme. Mathematically, the jump from the current SOP to the orthogonal state is achieved by reversing the signs of the 3×3 sub-Mueller-matrix elements m_{ij}, where $i, j \geq 2$. The desired result is to reach the orthogonal SOP state with the least number of steps; ideally, it can be done in a single step. However, with a fiber-squeezer-based PC, reversing the signs of all 3×3 sub-Mueller-matrix elements requires a polarimeter

$$M(\varphi_3, \varphi_2, \varphi_1) = \begin{pmatrix} 1 & 0 & 0 & 0 \\ 0 & \cos\varphi_2 & -\sin\varphi_2 \sin\varphi_1 & \sin\varphi_2 \cos\varphi_1 \\ 0 & -\sin\varphi_3 \sin\varphi_2 & \cos\varphi_3 \cos\varphi_1 - \sin\varphi_3 \cos\varphi_2 \sin\varphi_1 & \cos\varphi_3 \sin\varphi_1 + \sin\varphi_3 \cos\varphi_2 \cos\varphi_1 \\ 0 & -\cos\varphi_3 \sin\varphi_2 & -\sin\varphi_3 \cos\varphi_1 - \cos\varphi_3 \cos\varphi_2 \sin\varphi_1 & -\sin\varphi_3 \sin\varphi_1 + \cos\varphi_3 \cos\varphi_2 \cos\varphi_1 \end{pmatrix} \tag{6}$$

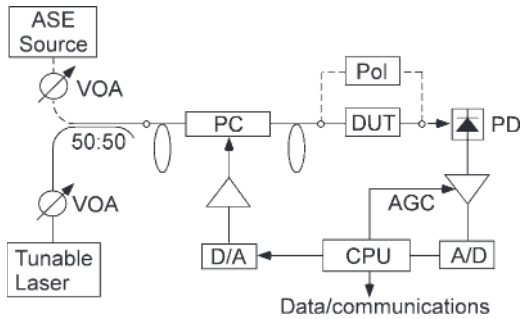

Fig. 4. Prototype automatic max–min search PDL/DOP measurement setup (VOA, variable optical attenuator; Pol, polarizer; A/D, analog-to-digital converter; D/A, digital-to-analog converter).

measurement of the current SOP and current phase retardation of each waveplate. For a simple measurement system with fiber-squeezer-based PC implementation, we can set the initial step to be as large as π-phase retardation at any waveplate of the PC. For example, a half-wave or π-phase change, i.e., a V_π voltage step on the last actuator, can effectively invert the s_2 and s_3 components in Stokes space.

IV. Experimental Results

To verify the proposed max–min search approach and performance, we implemented the prototype measurement setup shown in Fig. 4. A microprocessor is used for system control and signal processing in the prototype setup. A personal computer with a LabVIEW data acquisition program was used to acquire measurement results and to control the wavelength sweep. A polarized (ER > 40 dB) tunable laser with a wavelength range of 1520–1620 nm was used as the light source for PDL characterization, and an unpolarized amplified spontaneous emission (ASE) source was combined with the tunable laser to create a test light source for DOP measurement. A fiber-squeezer-based PC with half-wave voltages of $\sim$25 V was selected for the prototype system. The activation loss and built-in PDL of the PC were $<$ 0.01 dB when the PC was actuated sequentially. The typical phase-retardation range is 0–5π for each waveplate. The photoreceiver circuit consisted of an InGaAs detector and an adjustable-gain transimpedance amplifier. Because our experiment was designed only to verify the concept, no attempt was made to correct the polarization-dependent responsivity (PDR) of the photodetector.

In our prototype setup, the dc voltage actuation algorithm discussed in Section III was used for its easy implementation and system control. Experiment results showed that the search-state switching using orthogonal SOP property resulted in much faster convergence when the search mode changed from maximum to minimum and vice versa. A dc voltage step of V_π is applied to one of the PC stages during the changeover.

We selected three different test devices to cover a large PDL range. A fiber connectorized/angle-polished connector (FC/APC)–air interface was used at the low-PDL extreme, while an in-line fiber polarizer represented the high-PDL extreme. The third component was a regular 2 $\times$ 2 10-dB fused-fiber coupler. The PDL of each component was measured repetitively over a period of more than 30 min, and the measurement results were recorded by a personal computer. As shown in Fig. 5(a) and (b), the max–min search method performs consistently at both very low and very high PDL extremes, which are still challenges to most of the commercial PDL meters. Note that in Fig. 5(a), the measured PDL of the FC/APC–air interface is a vector sum of connector PDL and photodetector PDR. Nevertheless, the measurement stability at very low PDL was clearly demonstrated.

For comparison purposes, we also measured the PDL on the 10-dB port of a 2 $\times$ 2 fused-fiber coupler using both our prototype setup and the Jones-matrix eigen-analysis (JEA) method on a commercial instrument. As shown in Fig. 6, despite a small difference in average PDL values between the two methods (partially due to the detector PDR in our prototype setup), the max–min search approach resulted in a much tighter distribution than the measurement on commercial instrument. The standard deviations of the measured PDL using the max–min search and JEA methods were 0.002 and 0.009 dB, respectively. The increase in PDL near measurement number 2000 was attributed to fiber movement coupled with detector nonzero PDR.

The measurement repeatability over time and wavelength was investigated by conducting PDL measurements over two weeks at wavelengths ranging from 1520 to 1620 nm in 2-nm steps. A 2 $\times$ 2 directional coupler was used as the DUT sample. The coupler and fiber jumpers were taped to the surface of an optical table to minimize data fluctuations due to photodetector PDR. Except for a few wavelengths near 1590 nm, the prototype system demonstrated a repeatability of 0.02 dB for all wavelengths over the test period, as shown in Fig. 7.

The DOP measurement was carried out by replacing the DUT in the setup with a linear polarizer shown in Fig. 4. The ASE source was switched on and combined through a 3-dB 2 $\times$ 2 fused coupler with the output of the tunable laser set at 1550 nm. The optical power of each path could be adjusted independently using two variable optical attenuators. The DOP of the mixed beam was adjustable from $\sim$3% to 100%. The 3% residual DOP of the ASE source is mainly due to the PDL of the 3-dB fused coupler. Using this light source, we measured DOP values using both the max–min search method and an Agilent 8509 C lightwave polarization analyzer. The measured DOP values matched very well, as shown in Fig. 8.

V. Discussion

The experimental results from the prototype PDL/DOP measurement setup demonstrate that the automatic max–min search method is a promising approach for accurate high-speed PDL/DOP characterization. Based on the experimental results, the max–min search approach offers many unique advantages. It effectively reduces a two-dimensional pseudorandom or deterministic scanning search over the entire Poincaré sphere to a deterministic quasi one-dimensional line search with unique search results. Therefore, an active and efficient search-and-measure algorithm can be implemented for fast PDL and DOP measurements. Like the all-states scanning approach, the max–min search method does not require optical power or wavelength-calibration matrices. Furthermore, the automatic max–min search method can overcome the wavelength

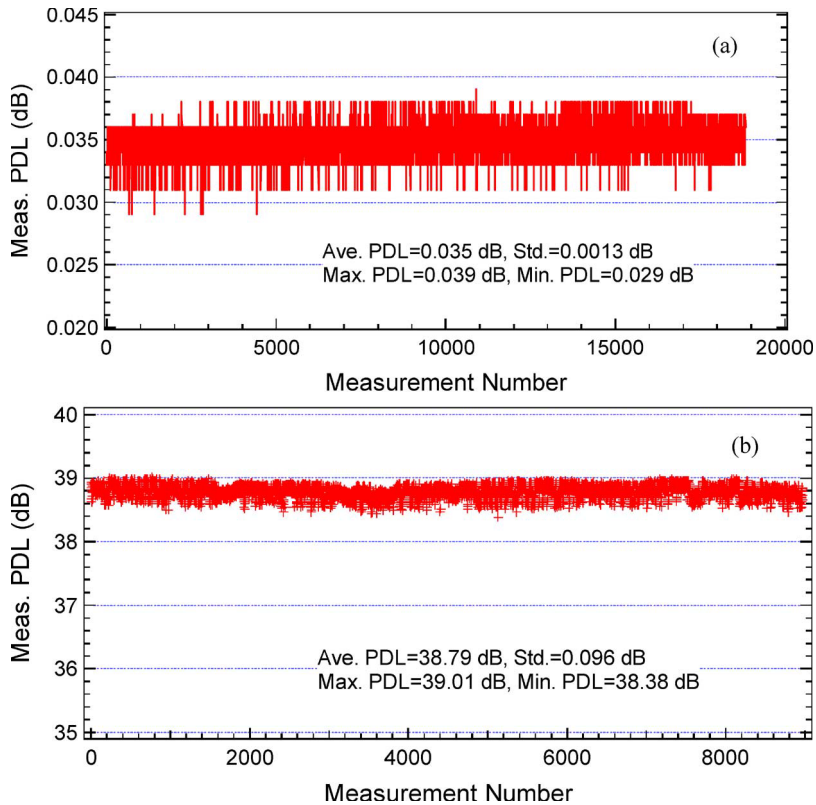

Fig. 5. PDL measurement data and statistics for (a) an FC/APC–air interface and (b) an in-line fiber polarizer at 1550 nm.

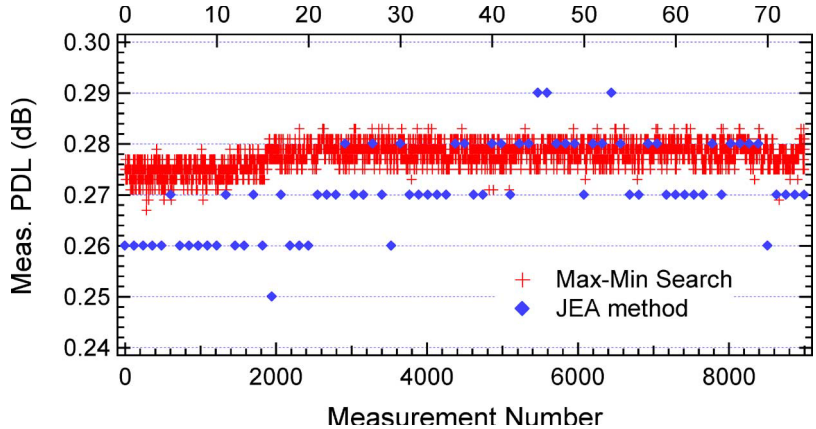

Fig. 6. PDL repeatability measurement on the 10-dB port of a 2 × 2 coupler using the prototype max–min search setup. JEA repeatability measurement was performed on a commercial instrument (with the measurement numbers on the top axis) using the same coupler ports.

dependence of polarization scramblers that operate in the resonant mode. Therefore, its operation wavelength range is very wide and is limited only by the light source, fiber bandwidth, and detector response. This approach also offers a large measurement dynamic range for both PDL and DOP. PDL in the range of more than 30 dB can be measured accurately, as demonstrated in our experiment.

The measurement speed depends on the response time of the PC and data processing electronics. In our prototype PDL/DOP measurement setup, we obtained 9000 data points in a 30-min interval, with a speed of 5 measurements/s. In this system, we found that the measurement speed was mainly limited by electronics. The intrinsic rise/fall time of the PC is in the order of 35 μs for each voltage step. With properly designed electronics, 10 ms will be sufficient for PC actions. The measurement speed can be further increased if an ultrahigh speed PC such as those made of $LiNbO_3$ [31] is employed in the system. Therefore, the max–min search approach offers significant measurement-speed advantages over the random-scanning method.

The measurement-speed advantage can also be attributed to the calibration-free feature of the max–min search method. The self-referencing nature of this approach makes the measurement insensitive to common sources of uncertainty, such as source-laser output-power wavelength dependence, source-laser output-SOP drift due to fiber movement, photodetector wavelength-dependent response, and amplifier gain.

The accuracy of the max–min search measurement system depends on system noise, circuit architecture, measurement

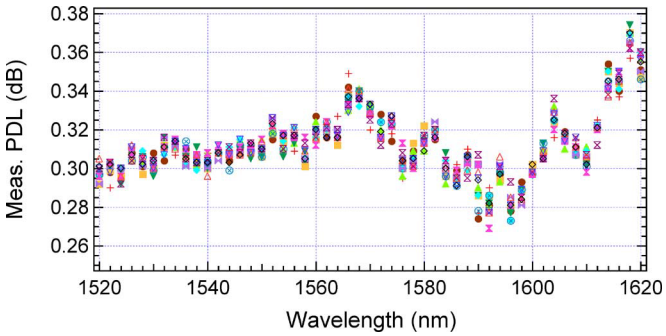

Fig. 7. Long-term automatic max–min search PDL measurement repeatability over C- and L-band wavelengths measured for a 2×2 fused coupler.

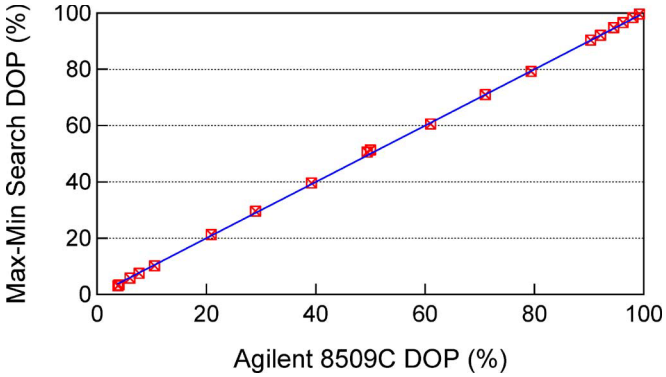

Fig. 8. DOP measurement correlation between the prototype automatic max–min search method and Agilent 8509 C. The straight line represents 100% correlation.

control, and the PDL of the optical components used in the measurement system. Limitations due to the optical system can be analyzed in analogy to the all-state scanning method because they share the same optical implementation configuration. The PDL from the PC and the following components will add to the DUT's PDL value vectorally and increase measurement uncertainty. Therefore, all optical components must have negligible PDL when compared with the DUT. DOP measurement accuracy also depends on the system PDL, e.g., a small amount of system PDL can directly affect the DOP measurement accuracy, particularly at the low-DOP end, as follows:

$$\Delta\text{DOP}(\%) = 11.5 \times \text{PDL [in decibels]}. \tag{7}$$

The system PDL includes contributions from the PC, the fiber segments to and from the DUT, the fiber connectors, and the photodetector. The selection of PC provided us with a very low PDL PC that is ideal for high-accuracy PDL/DOP measurement applications. Once the photodetector PDR is minimized, the accuracy of the max–min search method can reach < 0.02 dB. In addition, the optical source for PDL measurement must be very stable over the measurement time interval.

The noise effect on the measurement accuracy is often manifested at low- and high-PDL/DOP values. Circuit noise can result in the inversion of the maximum/minimum optical transmittance at low PDL and DOP that gives negative PDL and DOP. At the high-PDL end, the circuit noise limits the maximum PDL value. The PDL measurement accuracy also becomes input light level dependent. In our prototype measurement setup, signal average and automatic gain control were implemented to reduce the noise effect.

VI. Summary

We showed theoretically that the polarization-dependent transmittance of monochromatic light passing through an optical component or system can be described by a limaçon of revolution in Stokes space (S1, S2, S3). There is only one unique maximum and one unique minimum on an ordinary limaçon contour. The optical transmission changes monotonically between the minimum and maximum values. Therefore, a simple line search of the maximum and minimum transmission powers can determine the PDL and DOP values without ambiguity.

Using a PC with ultralow activation loss and PDL, we successfully implemented the max–min search method to accurately characterize component PDL and light-source DOP. We demonstrated that the method has the advantages of high measurement speed, high accuracy, large measurement dynamic range, wavelength insensitivity, and calibration-free operation.

Acknowledgment

The authors would like to thank A. Yang, L. Lin, J. Chen, and Dr. C. Yeh for their help in constructing the prototype PDL/DOP meter.

References

[1] F. Bruyere and O. Audouin, "Penalty in long-haul optical amplified system due to polarization dependent loss and gain," *IEEE Photon. Technol. Lett.*, vol. 6, no. 5, pp. 654–656, May 1994.

[2] E. Lichtman, "Limitations imposed by polarization dependent gain and loss on all-optical ultralong communication systems," *J. Lightw. Technol.*, vol. 13, no. 5, pp. 906–913, May 1995.

[3] N. Gisin and B. Huttner, "Combined effects of polarization mode dispersion and polarization dependent losses in optical fibers," *Opt. Commun.*, vol. 142, no. 1–3, pp. 119–125, Oct. 1997.

[4] L. Yan, Q. Yu, Y. Xie, and A. Willner, "Experimental demonstration of the system performance degradation due to combined effect of polarization-dependent loss with polarization mode dispersion," *IEEE Photon. Technol. Lett.*, vol. 14, no. 2, pp. 224–226, Feb. 2002.

[5] N. Kim, D. Lee, H. Yoon, J. Park, and N. Park, "Limitation of PMD compensation due to polarization-dependent loss in high-speed optical transmission links," *IEEE Photon. Technol. Lett.*, vol. 14, no. 1, pp. 104–106, Jan. 2002.

[6] Telcordia, *Generic Requirements for Passive Optical Components*, 2001. GR-1209-CORE, issue 3.

[7] A. El Amari, N. Gisin, B. Perny, H. Zbinden, and C. W. Zimmer, "Statistical prediction and experimental verification of concatenations of fiber optic components with polarization dependent loss," *J. Lightw. Technol.*, vol. 16, no. 3, pp. 332–339, Mar. 1998.

[8] TIA/EIA-455-157, *Measurement of Polarization Dependent Loss (PDL) of Single-Mode Fiber Optic Components (ANSI/TIA-455-157)*. Arlington, VA: Telecommun. Ind. Assoc., May 1995.

[9] C. Hentschel and D. Derickson, "Insertion loss measurements," in *Fiber Optic Test and Measurement*, D. Derickson, Ed. Upper Saddle River, NJ: Prentice-Hall, 1998, ch. 9.

[10] B. Heffner, "Deterministic, analytically complete measurement of polarization-dependent transmission through optical devices," *IEEE Photon. Technol. Lett.*, vol. 4, no. 5, pp. 451–454, May 1992.

[11] B. Nyman, D. Favin, and G. Wolter, "Automated system for measuring polarization dependent loss," in *Proc. Opt. Fiber Commun. Conf., Tech. Dig.*, San Jose, CA, pp. 230–231.

[12] D. Favin, B. Nyman, and G. Wolter, "System and Method for Measuring Polarization Dependent Loss," US Patent 5371597, Dec. 6, 1994.

[13] C. Hentschel and S. Schmidt, *PDL Measurements Using the HP 8169 a Polarization Controller*. Palo Alto, CA: Agilent Technologies, 2002.

[14] R. Craig, S. Gilbert, and P. Hale, "High accuracy, nonmechanical approach to polarization dependent transmission measurements," *J. Lightw. Technol.*, vol. 16, no. 7, pp. 1285–1294, Jul. 1998.
[15] R. Craig, "Accurate spectral characterization of polarization-dependent loss," *J. Lightw. Technol.*, vol. 21, no. 2, pp. 432–437, Feb. 2003.
[16] TIA/EIA-455-198, *Measurement of Polarization Dependence of Insertion Loss of Single-Mode Fiberoptic Components by a Mueller Matrix Method (TIA 455-198)*. Arlington, VA: Telecommun. Ind. Assoc., Dec. 2002.
[17] S. M. R. M Nezam, L. Yan, J. E. McGeehan, Y. Shi, A. E. Willner, and S. Yao, "Enhancing the dynamic range and DGD monitoring windows in DOP-based DGD monitors using symmetric and asymmetric partial optical filtering," *J. Lightw. Technol.*, vol. 22, no. 4, pp. 1094–1102, Apr. 2004.
[18] L.-S. Yan, X. S. Yao, Y. Shi, and A. E. Willner, "Simultaneous monitoring of both optical signal-to-noise-ratio and polarization-mode-dispersion using polarization scrambling and polarization-beam-splitting," *J. Lightw. Technol.*, vol. 23, no. 10, pp. 3290–3294, Oct. 2005.
[19] L.-S. Yan, X. Yao, C. Yu, Y. Wang, L. Lin, Z. Chen, and A. E. Willner, "High-speed and highly repeatable polarization-state analyzer for 40-Gb/s system performance monitoring," *IEEE Photon. Technol. Lett.*, vol. 18, no. 4, pp. 643–645, Feb. 2006.
[20] X. Zhou, P. Magill, and M. Birk, "Model for polarization-dependent gain due to pump depletion in a WDM system with forward-pumped Raman amplification," *J. Lightw. Technol.*, vol. 23, no. 3, pp. 1056–1062, Mar. 2005.
[21] S. Namiki and Y. Emori, "Ultrabroad-band Raman amplifiers pumped and gain-equalized by wavelength-division-multiplexed high-power laser diodes," *IEEE J. Sel. Topics Quantum Electron.*, vol. 7, no. 1, pp. 3–16, Jan. 2001.
[22] B. Szafraniec and G. Sanders, "Theory of polarization evolution in interferometric fiber-optic depolarized gyros," *J. Lightw. Technol.*, vol. 17, no. 4, pp. 579–590, Apr. 1999.
[23] X. Yao, "Accurate DOP characterization with less effort," in *Fiberopt. Prod. News*. New York: Reed Elsevier, Dec. 2003.
[24] R. M. A. Azzam and M. Bashara, *Ellipsometry and Polarized Light*. Amsterdam, The Netherlands: North-Holland, 1987, ch. 1–2.
[25] W. H. Beyer, *CRC Standard Mathematical Tables*, 28th ed. Boca Raton, FL: CRC, 1987, pp. 220–221.
[26] B. DeBoo, J. Sasian, and R. Chipman, "Degree of polarization surfaces and maps for analysis of depolarization," *Opt. Express*, vol. 12, no. 20, pp. 4941–4958, Oct. 2004.
[27] PolaRite II polarization controller, General Photonics Corp. [Online]. Available: http://www.generalphotonics.com/PolariteIImanual.htm
[28] E. Collett, *Polarized Light in Fiber Optics*. Lincroft, NJ: PolaWave Group, 2003, ch. 9, pp. 219–225, Sec. 11.
[29] L.-S. Yan, Q. Yu, and A. E. Willner, "Uniformly distributed states of polarization on the Poincare sphere using an improved polarization scrambling scheme," *Opt. Commun.*, vol. 249, no. 1–3, pp. 43–50, May 2005.
[30] J. Kim and B. W. Lee, "A new high speed measurement method of polarization dependent loss," in *Proc. NFOEC*, Baltimore, MD, Jul. 2001.
[31] F. Heismann, "Analysis of a reset-free polarization controller for fast automatic polarization stabilization in fiber-optic transmission systems," *J. Lightw. Technol.*, vol. 12, no. 4, pp. 690–699, Apr. 1994.

Yongqiang Shi (M'03) received the B.S. degree from Suzhou University, Suzhou, China, in 1982, the M.S. degree in physics from Hangzhou University (now Zhejiang University), Hangzhou, China, in 1984, and the Ph.D. degree in electrical engineering from the University of Southern California, Los Angeles, in 1992.

He is currently with Boeing Satellite Systems, Los Angeles, where he conducts optical communication research and engineering. Prior to joining Boeing Satellite Systems, he was the Chief Scientist with General Photonics, where he was in charge of daily research and development activities including polarization control, polarization-mode-dispersion emulation, and compensation components and instruments. From 1999 to 2001, he was a member of the Technical Staff with Lucent Technologies, where he conducted 40-Gb/s electrooptic modulator research and development. He was also a Staff Scientist with the TACAN Corporation, where he was in charge of integrated nonlinear optical device research and development programs. His research interests include integrated optics, optical components, nonlinear optics and optical materials, high-speed modulator design and packaging, polarization control optics, RF photonics, and optical information processing.

Dr. Shi is a member of the Optical Society of America.

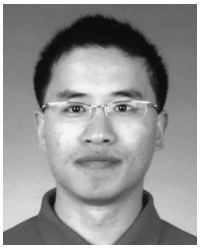

Lianshan Yan (S'99–M'05–SM'06) received the B.E. degree in optical engineering from Zhejiang University, Hangzhou, China, in 1994 and the Ph.D. degree in electrical engineering from the University of Southern California (USC), Los Angeles, in 2005.

From 1994 to 1999, he was with North China Research Institute of Electro-optics, where he worked on solid-state lasers. In September 1999, he joined the Optical Communications Laboratory, USC. He is currently a Senior Scientist and the Manager of engineering with General Photonics Corporation, Chino, CA, concentrating on polarization, timing, and spectrum control. He is the author and a coauthor of more than 100 papers in prestigious journals and conference proceedings. He is the holder of four U.S. patents and about ten pending ones. His research interests include enabling technologies for long-haul wavelength-division-multiplexing systems and polarization effects in fiber transmission.

Dr. Yan was a recipient of the IEEE Lasers and Electro-Optic Society (LEOS) Graduate Fellowship in 2002. He serves as a frequent referee for ten journals. He is a Senior Member of the IEEE LEOS and a member of the Optical Society of America and the Sigma Xi society.

X. Steve Yao (M'97) received the M.S. and Ph.D. degrees in electrical engineering/electrophysics from the University of Southern California, Los Angeles, in 1989 and in 1992, respectively.

From 1985 to 1987, he was an Optical Engineer with ADC Fiber Optics (a division of ADC Telecommunications), where he developed the first generation of fiber-optic wavelength-division-multiplexing devices. From 1990 to 2000, he was with the Jet Propulsion Laboratory, NASA, Pasadena, CA, where he worked on research and development of microwave photonic devices and systems and invented the optoelectronic oscillator that generates the world's cleanest 10–80-GHz signals. He was responsible for the design and demonstration of the X-band fiber-optic antenna remoting system for NASA's Deep Space Network. He is currently the Chief Technology Officer with General Photonics Corporation, Chino, CA, which is a company that provides the most complete product selections for polarization and timing control for the telecommunications and sensor industry. He is the author of more than 40 referred journal publications and a book chapter in *RF Photonic Technology in Optical Fiber Links* (Cambridge Univ. Press, 2002), which details his breakthrough research in an optoelectronic oscillator for generating 10-GHz and higher frequency signals. He has given invited speeches in numerous major photonics-related conferences and holds more than 30 issued U.S. patents and 15 pending applications.

Dr. Yao is a recipient of 29 innovation awards from NASA. Two products based on his inventions have won the Photonics Circle of Excellence Awards in 2000 and 2001, respectively. The awards are given to the top 25 most innovative products around the world each year. He also served as a member of the Technical Committee of the Optical Fiber Communications conferences and was an organization committee member for the Microwave Photonics Conference in 2000.