DATA SHEET

EX1200-6301
EX1200-6301T

(4) SP4T 50 RF MULTIPLEXERS, 3 GHZ
(4) SP4T 50 SELF-TERMINATED RF MULTIPLEXERS, 3 GHZ

FEATURES

Up to four SP4T RF multiplexer trees, > 3 GHz bandwidth

Suitable for switching RF signals to/from high bandwidth measurement devices such as oscilloscopes and function generators

50 W maximum switching power

50 Ω on-board self-termination option (EX1200-6301T)

SMB male connectors for high performance

No unterminated stub effects

VTI Instruments
www.vtiinstruments.com

OVERVIEW

The EX1200-6301 is designed with SMB male connectors for applications that require RF signal switching greater than 3 GHz in a 50 Ω environment. Excellent crosstalk and isolation performance is achieved by using short low-loss coaxial runs from the connector directly to the relays. All modules are designed to avoid any unterminated stub effects improving overall signal integrity and enabling the construction of larger high frequency multiplexer configurations while maintaining bandwidth and VSWR.

Six of the modules can be accommodated in a single EX1200 full rack mainframe or combined with other switch modules to create a flexible switching configuration that can cover a wide range of applications.

BLOCK DIAGRAM

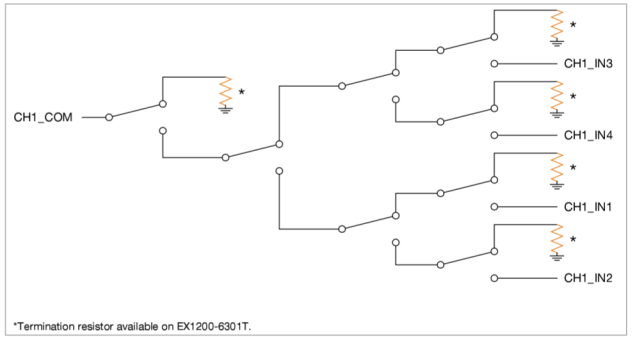

General Specifications

CHANNEL COUNT	
EX1200-6301	Dual (1 x 16) 50 Ω RF multiplexers, 3 GHz
EX1200-6301T	Quad (4 x 1) self-terminated multiplexer, 3 GHz
RELAY TYPE	Electromechanical, fail-safe
MAXIMUM SWITCHING VOLTAGE	220 VDC, 250 VAC rms
MAXIMUM SWITCHING CURRENT	2 A
MAXIMUM SWITCHING POWER	50 W
RATED SWITCH OPERATIONS	
Mechanical	5×10^5
Electrical	1×10^5 (full load)
SWITCHING TIME	< 5 ms
PATH RESISTANCE	< 1 Ω
INSULATION RESISTANCE	> 1×10^9 Ω
BANDWIDTH (-3 dB)	3 GHz (typical)
INSERTION LOSS (TYPICAL)	
1 GHz	< 0.5 dB
3 GHz	< 3.0 dB
CROSSTALK (TYPICAL)	
1 GHz	< -60 dB
3 GHz	< -55 dB
ISOLATION (TYPICAL)	
1 GHz	< -65 dB
3 GHz	< -55 dB
VSWR (TYPICAL)	
1 GHz	< 1.2:1
3 GHz	< 1.5:1

Ordering Information

EX1200-6301	(4) SP4T 50 Ω RF multiplexers, 3 GHz
EX1200-6301T	(4) SP4T 50 Ω self-terminated RF multiplexers, 1.5 GHz